KARAG

esperienza bagno...

KARAG Italia s.r.l.
Via della Scienza 8,
41051 Castelnuovo Rangone (MO), Italia
tel. +39 0595 332125 email. info@karag.it

Manuale di Installazione
Instructions d' Installation
Installation Manual
Οδηγίες τοποθέτησης

Vivox Side Panel

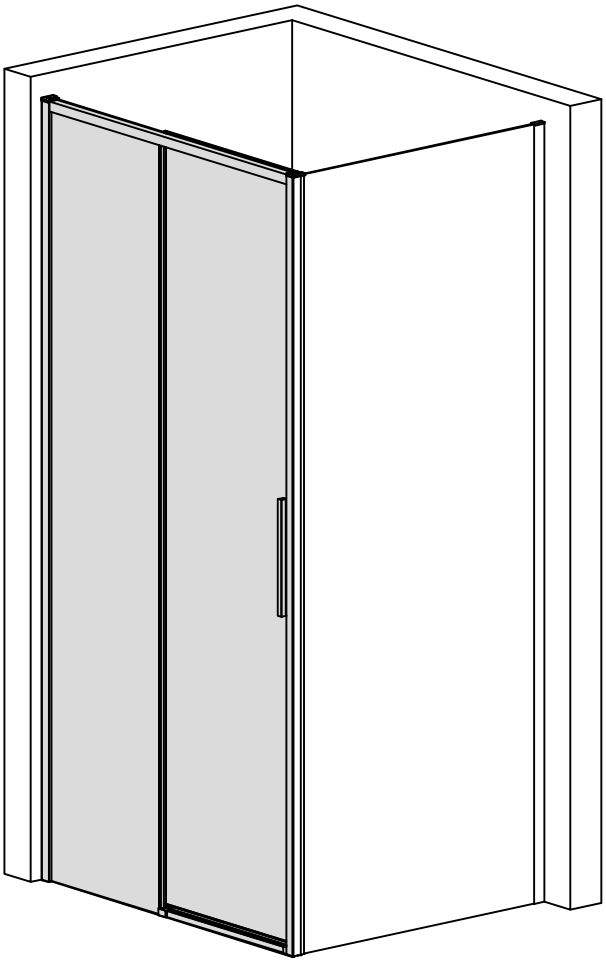

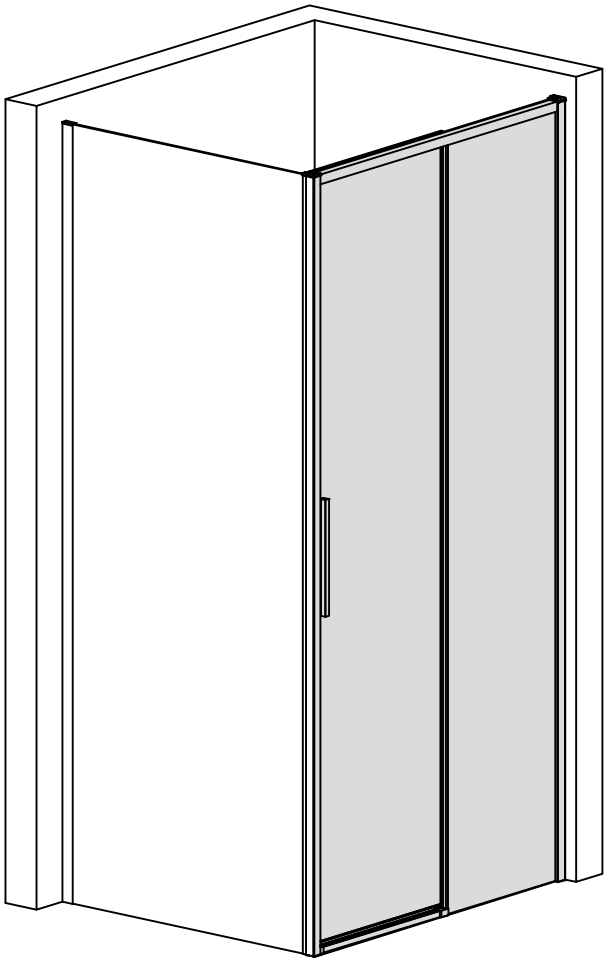

Per ulteriori informazioni
Pour informations supplementaires
More informations
Περισσότερες πληροφορίες

Email:
ufficiotecnicoclienti@karag.it

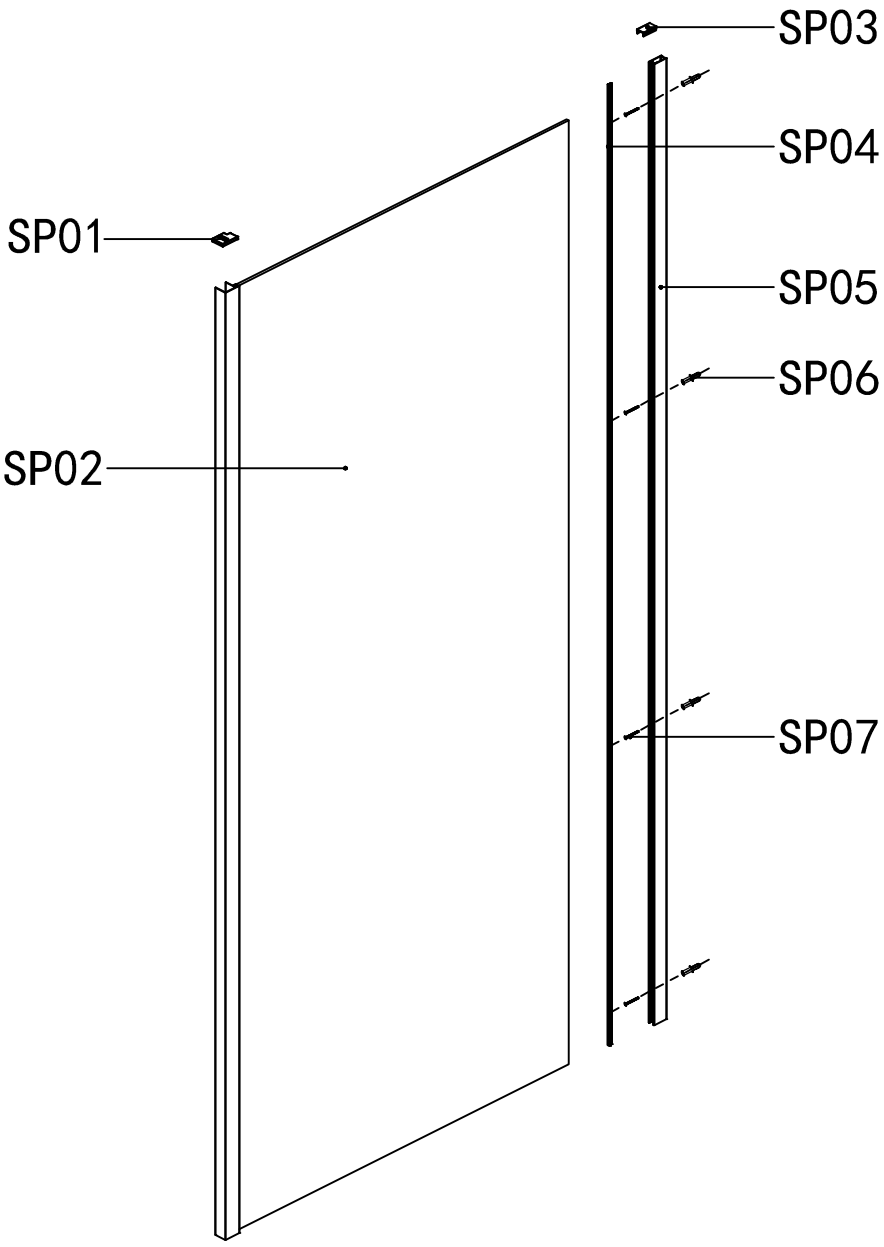
SP03
SP04
SP01
SP05
SP06
SP02
SP07

Serial number	Graphical	Name	Quantity	Remarks
SP01	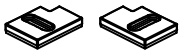	L/R	2PCS	
SP02			1PCS	
SP03			1PCS	
SP04			1PCS	
SP05	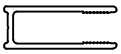		1PCS	
SP06	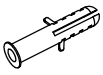		4PCS	
SP07			4PCS	

Size(mm)	A(mm)
1000	970-985
1100	1070-1085
1200	1170-1185
1300	1270-1285
1400	1370-1385

Size(mm)	B(mm)
700	675-690
800	775-790
900	875-890

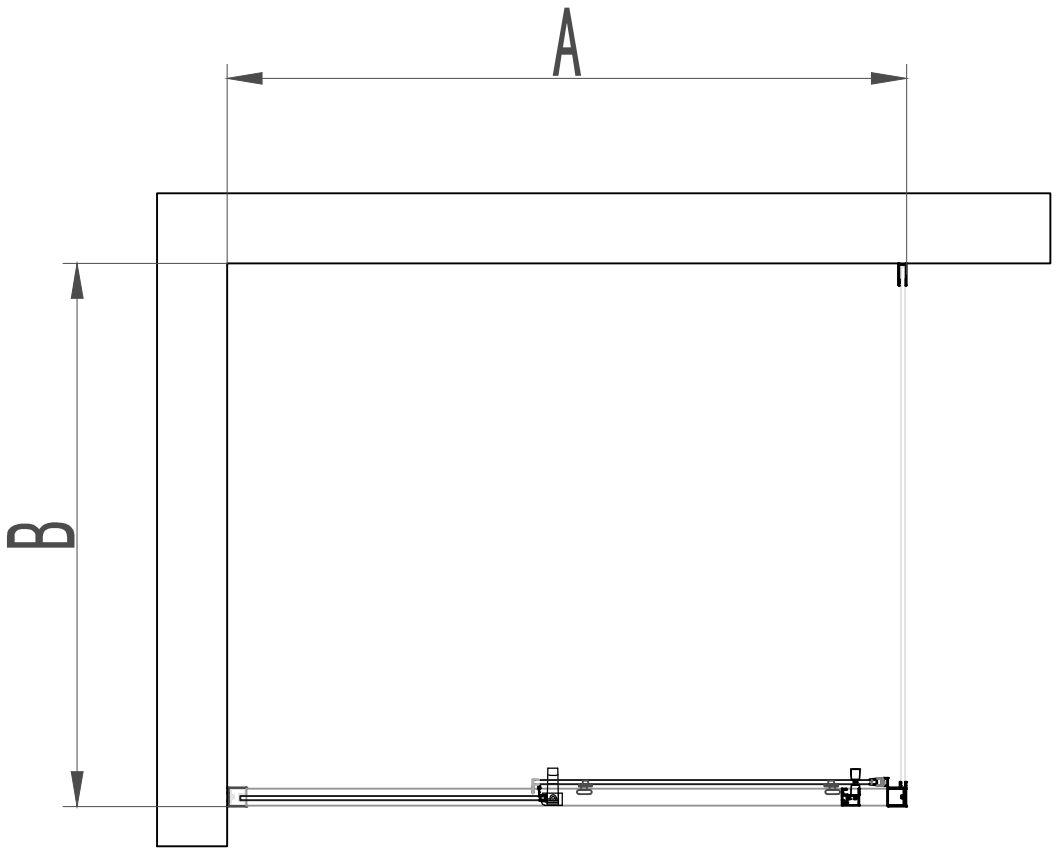

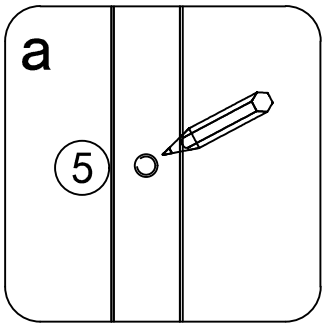
a
5

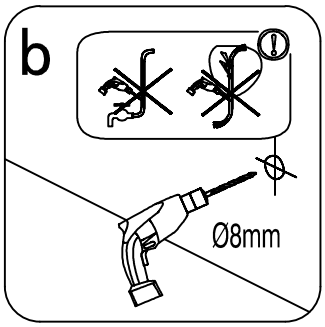
b
Ø8mm

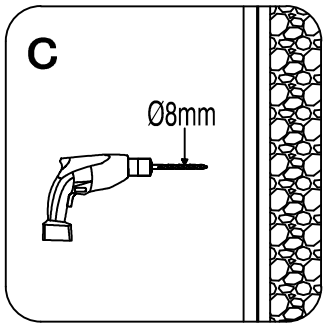
c
Ø8mm

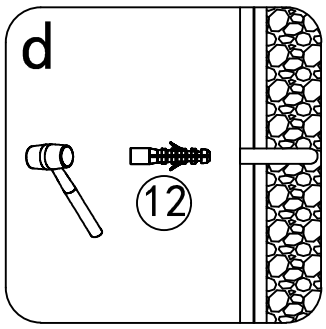
d
12

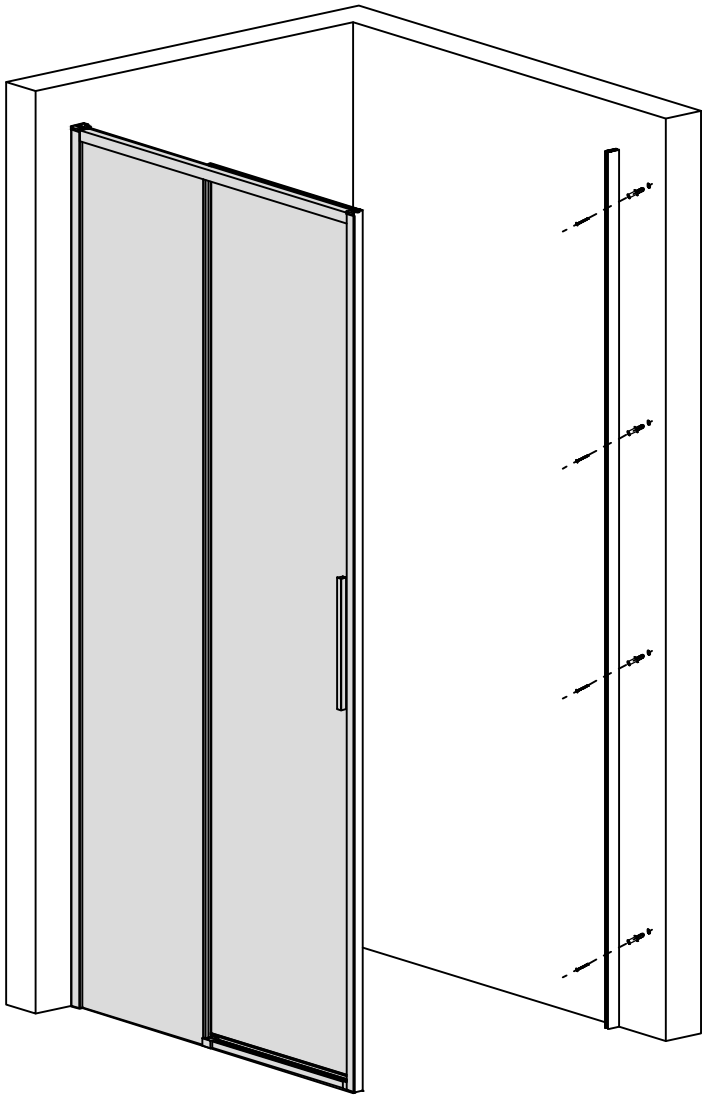

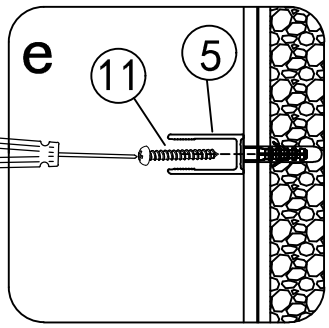
e
11
5

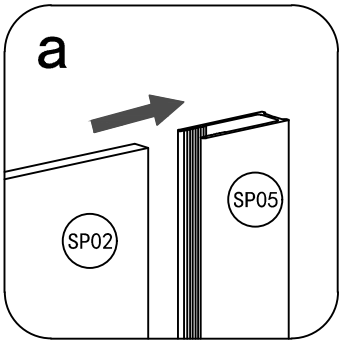
a
SP02
SP05

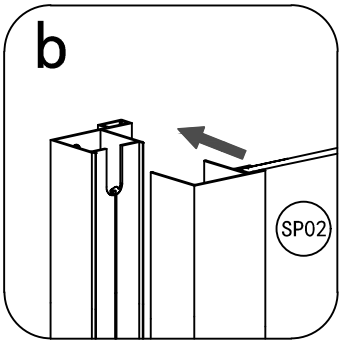
b
SP02

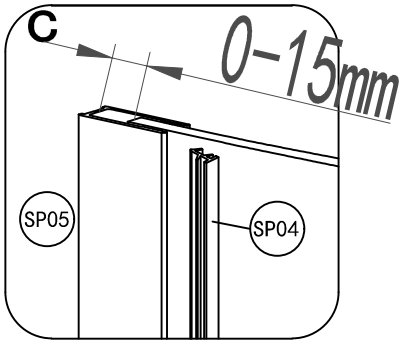
c
0-15mm
SP05
SP04

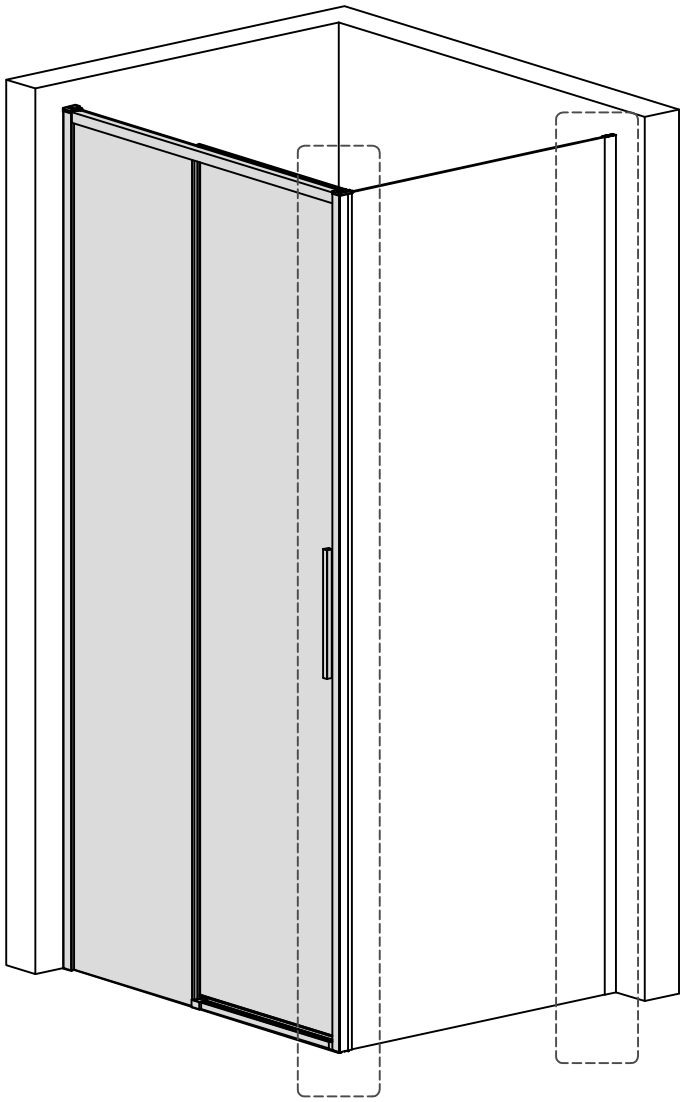

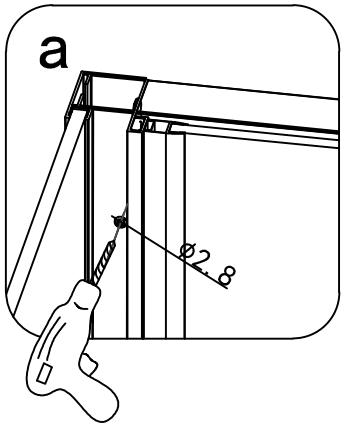
a
Ø2.8

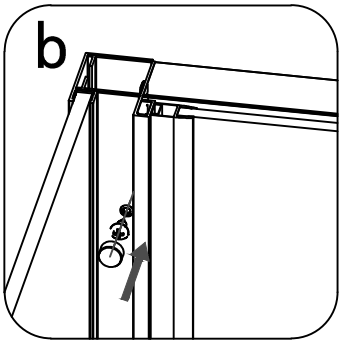
b

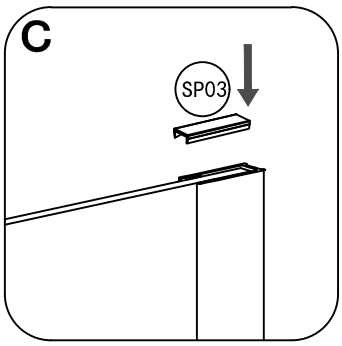
c
SP03

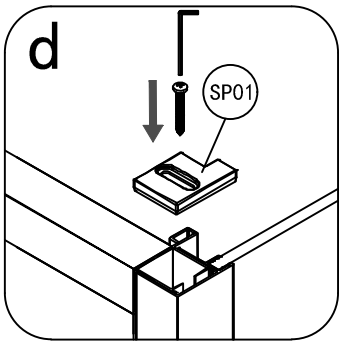
d
SP01

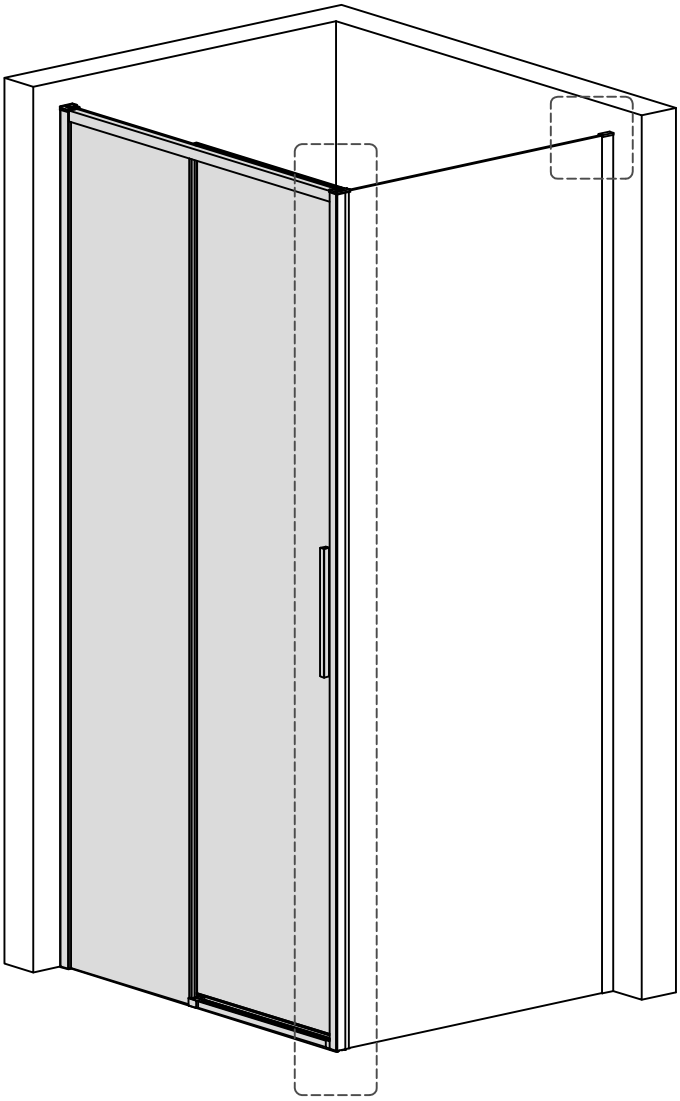


24h

